STOCK LOCKS®

A PRODUCT OF CompX® NATIONAL

C8073 CAM LOCK

- 5 DISC TUMBLER
- 90° OR 180° CAM TURN
- 1-3/16" CYLINDER LENGTH

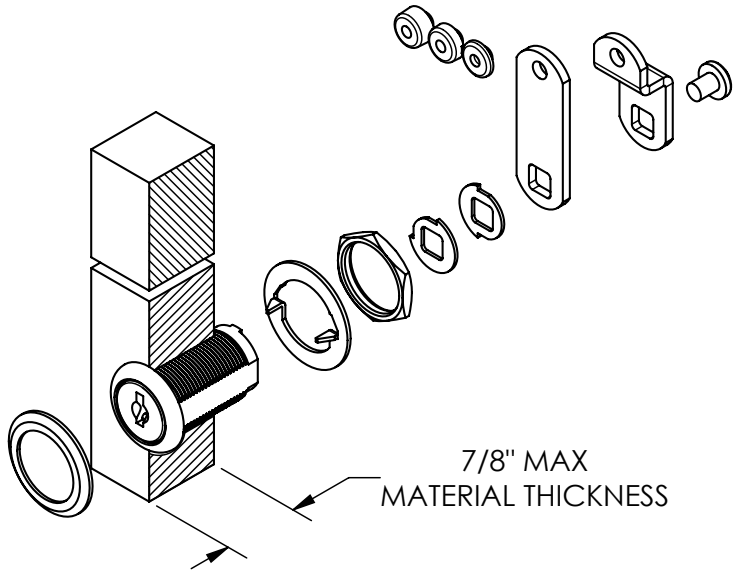

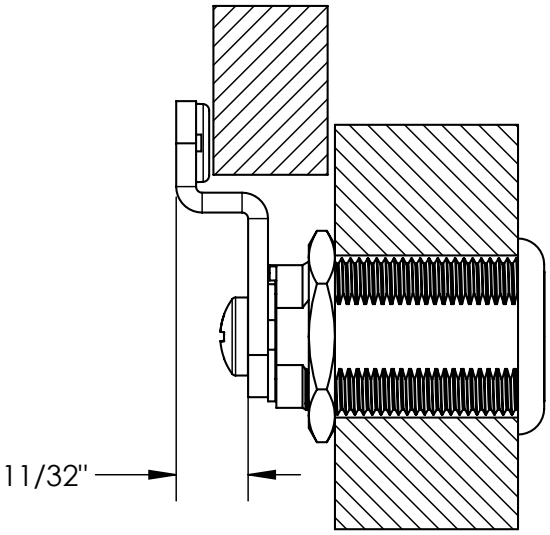

USE FORMED CAM FOR OVERLAY APPLICATION

LOCK MOUNTING HOLES

METAL

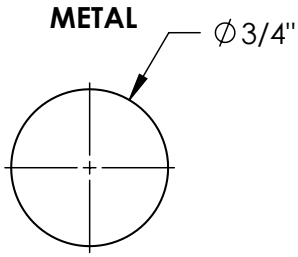

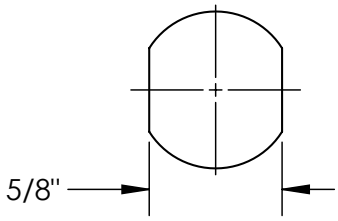

WOOD

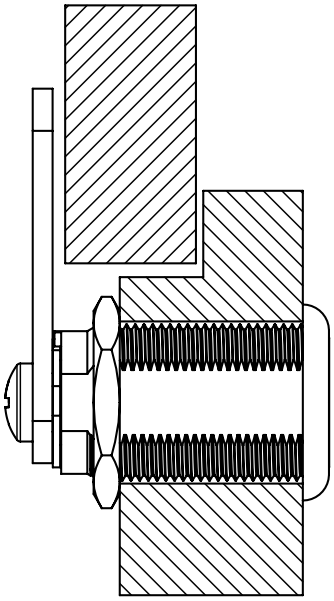

USE STRAIGHT CAM FOR LIPPED / OVERLAY APPLICATION

NOTE: DO NOT USE SPUR WASHER WITH METAL DOOR OR DRAWER