STOCK LOCKS®

A PRODUCT OF CompX® FORT

MFW 29078 CAM LOCK

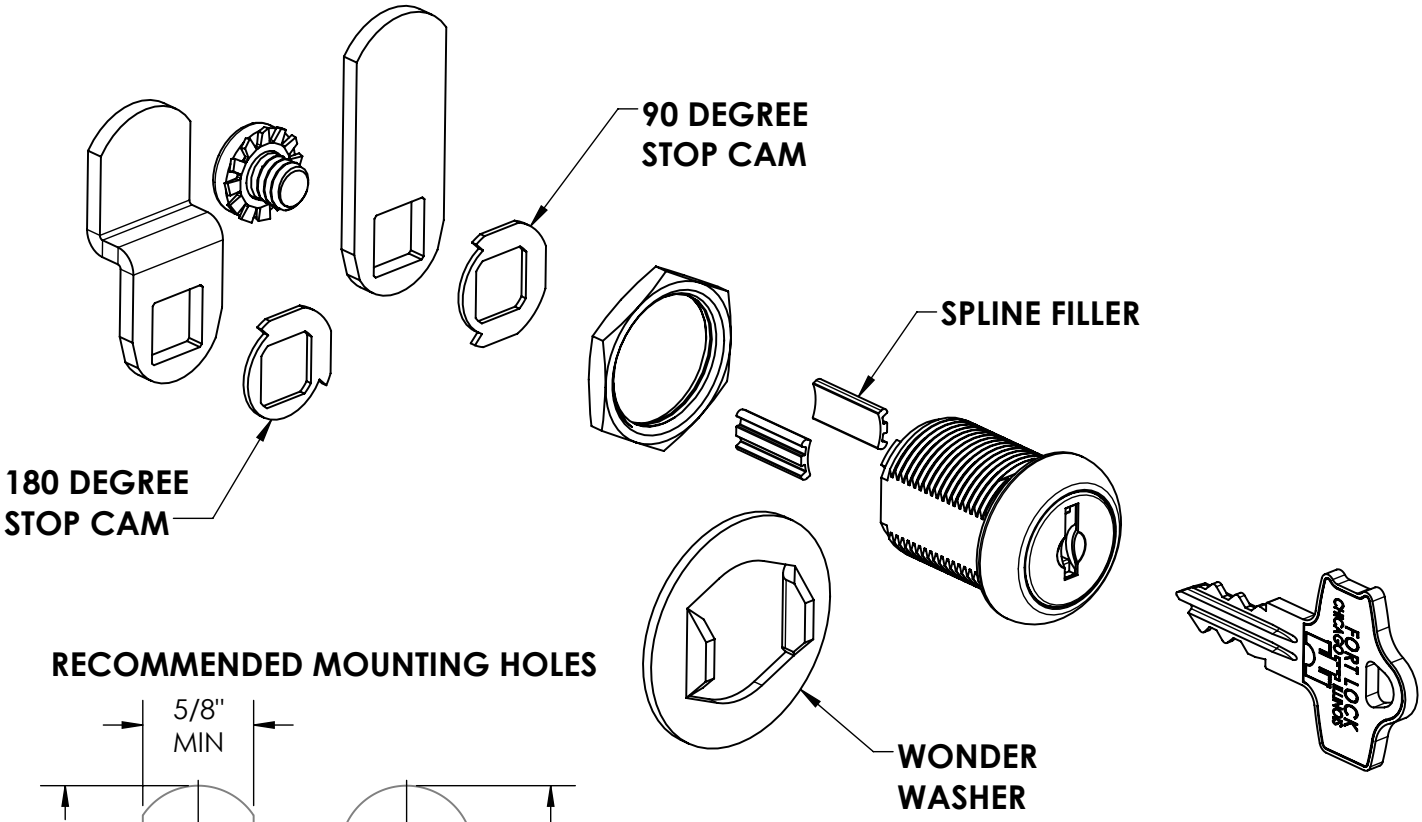

RECOMMENDED MOUNTING HOLES

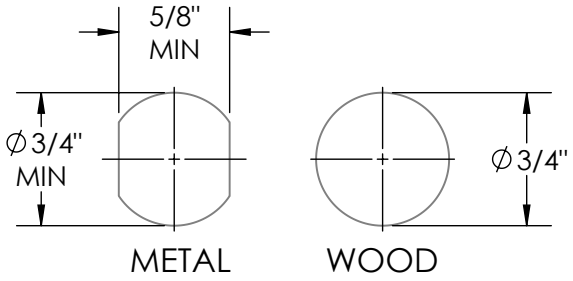

INSERT SPLINE FILLERS INTO CYLINDER SLOTS PER CHART

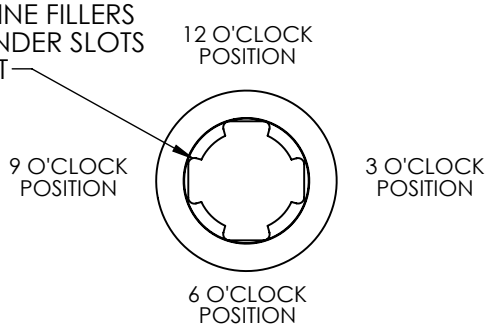

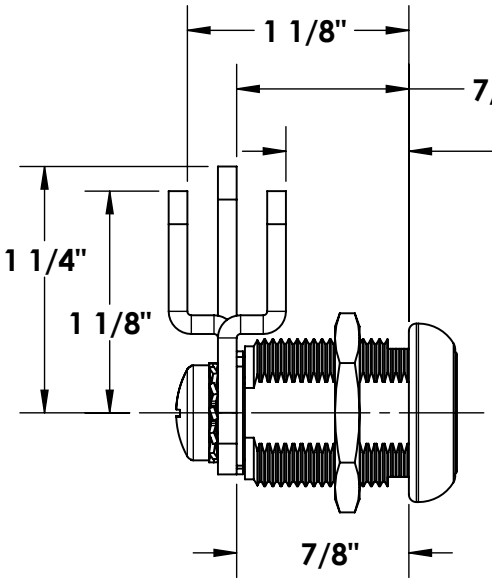

FUNCTION NO.	KEY ROTATION FROM 12 O'CLOCK POSTION TO	KEY REMOVABLE AT	USE CAM STOP	INSERT SPLINE FILLER AT
1	3 O'CLOCK	12 O'CLOCK ONLY	90 DEG RIGHT	3 O'CLOCK
2	3 O'CLOCK	12 AND 3 O'CLOCK	90 DEG RIGHT	NONE
3	6 O'CLOCK (RIGHT)	12 AND 6 O'CLOCK	180 DEG RIGHT	3 O'CLOCK
4	9 O'CLOCK	12 O'CLOCK ONLY	90 DEG LEFT	9 O'CLOCK
5	9 O'CLOCK	12 AND 9 O'CLOCK	90 DEG LEFT	NONE
6	6 O'CLOCK (LEFT)	12 AND 6 O'CLOCK	180 DEG LEFT	9 O'CLOCK