STOCK® LOCKS

A PRODUCT OF CompX CHICAGO

OU-4260 T-HANDLE LOCK

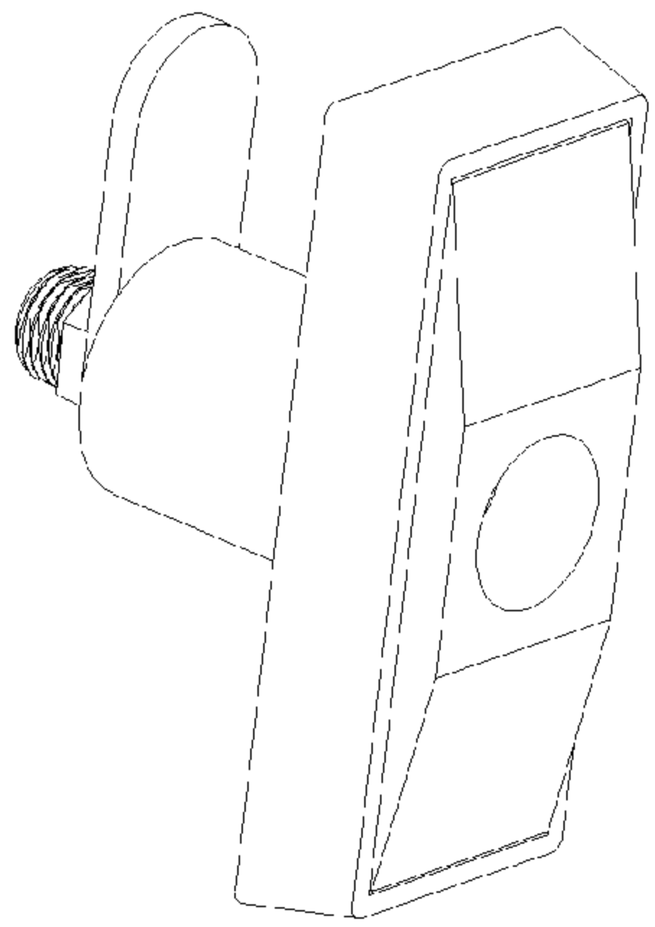
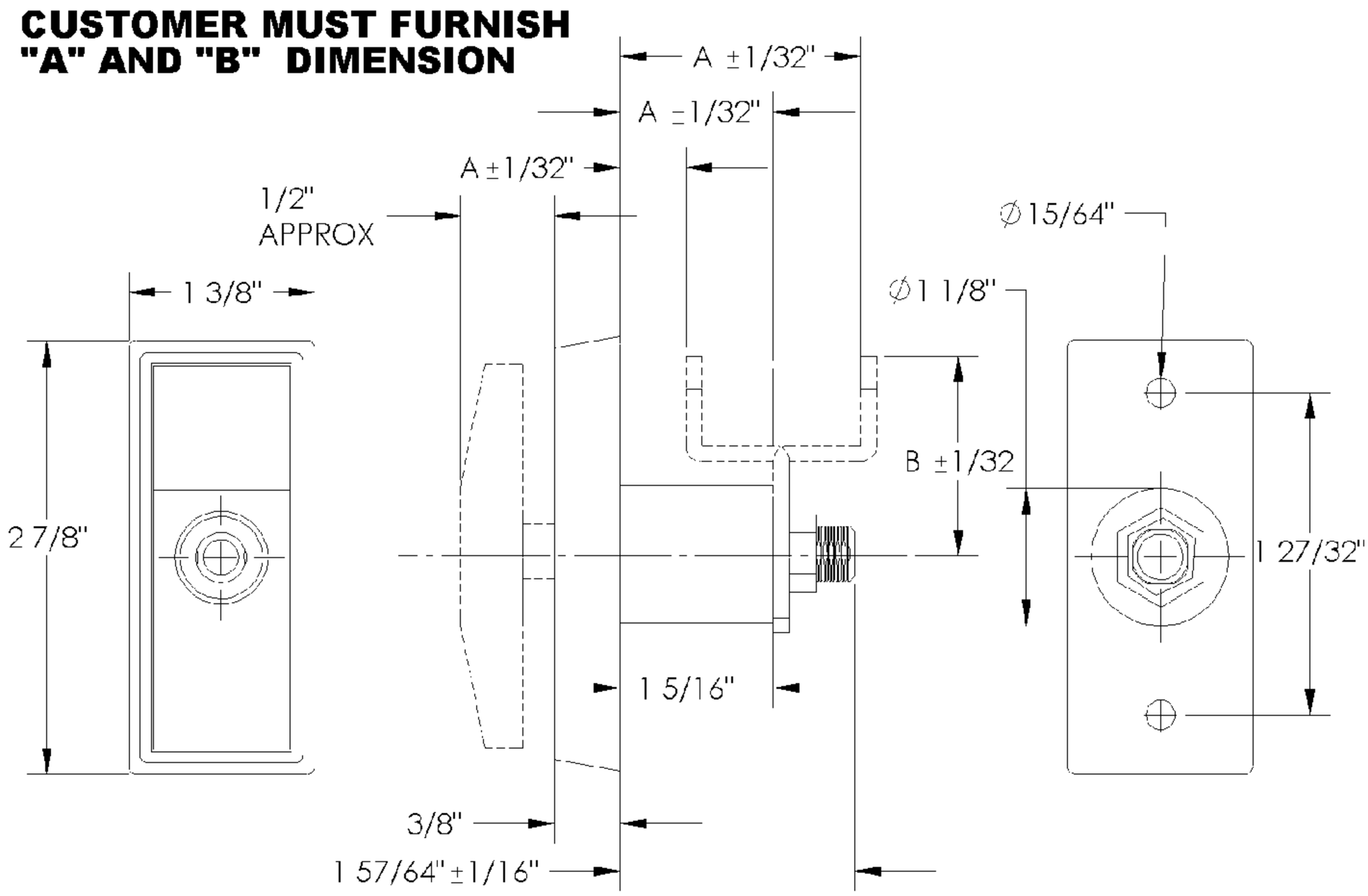
CUSTOMER MUST FURNISH "A" AND "B" DIMENSION