STOCK LOCKS®

A PRODUCT OF CompX® FORT
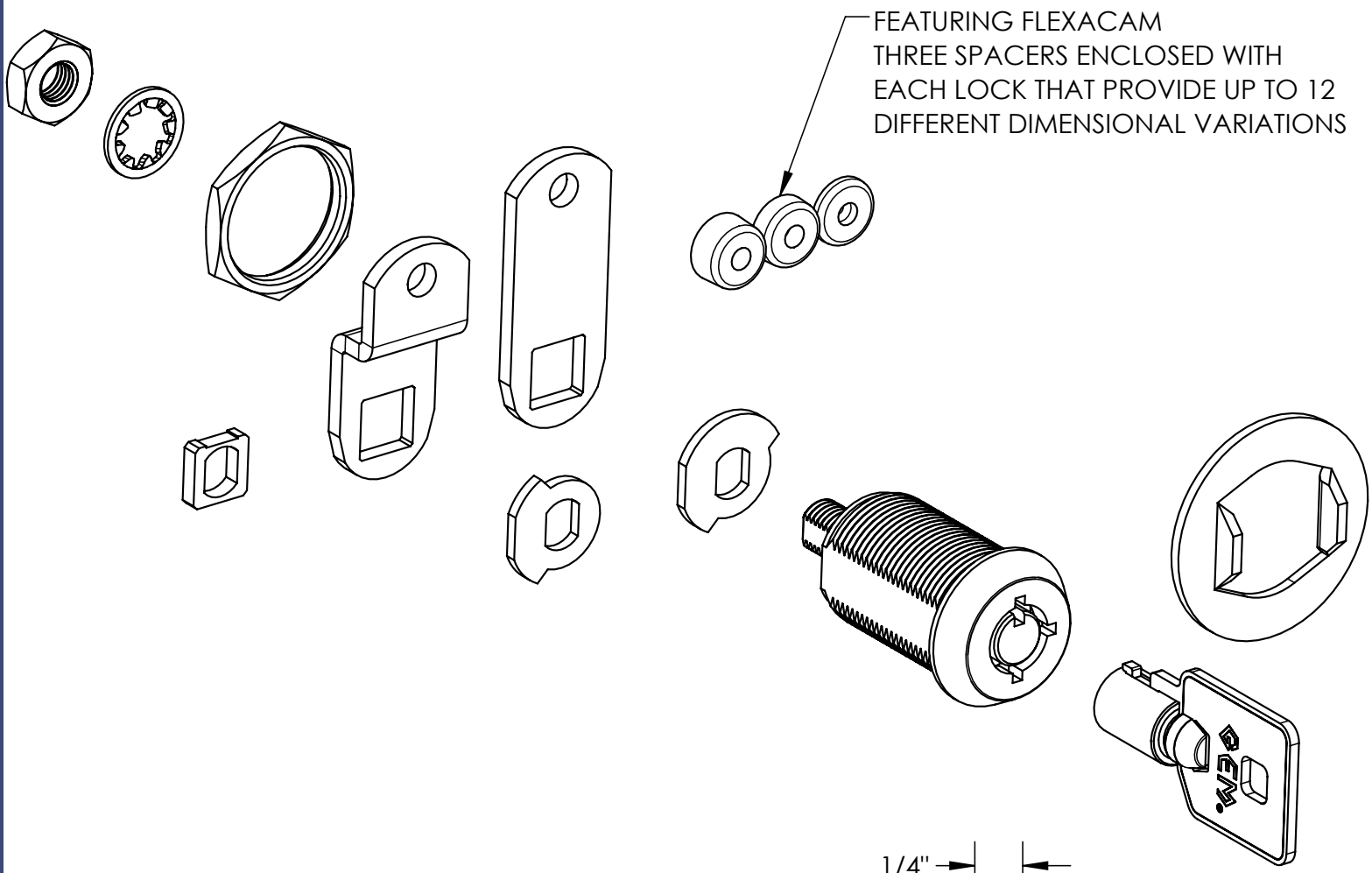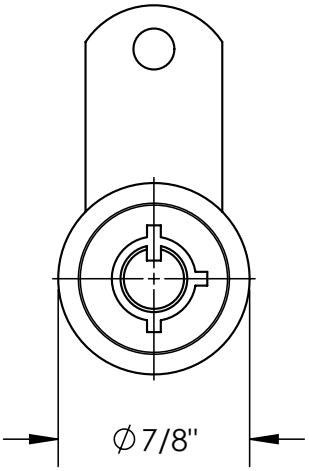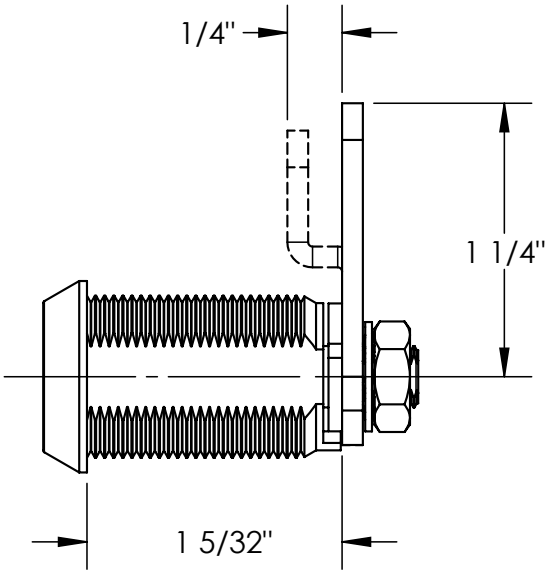
MFW-1118 TUBULAR CAM LOCK