STOCK LOCKS®

A PRODUCT OF CompX® FORT
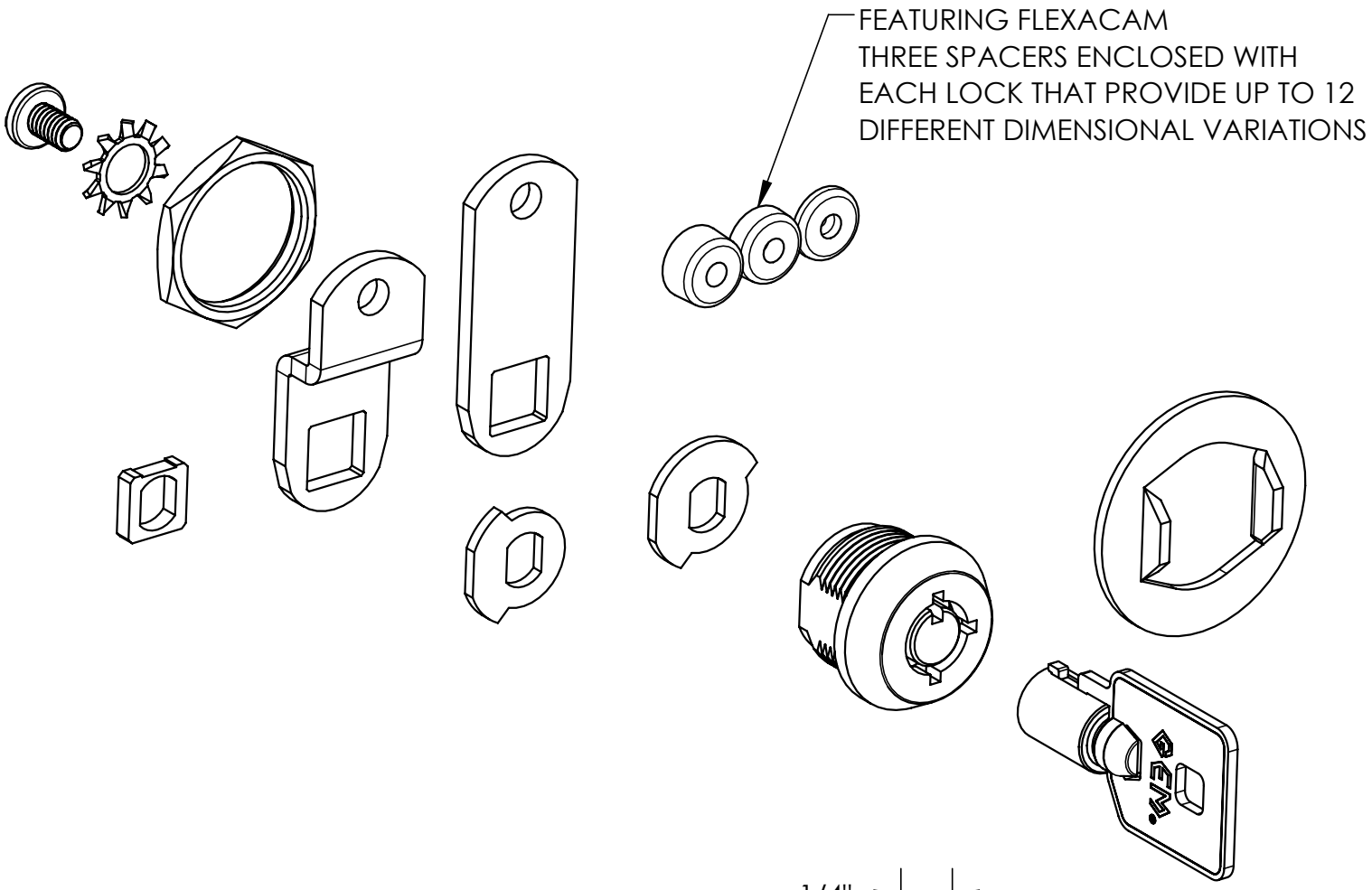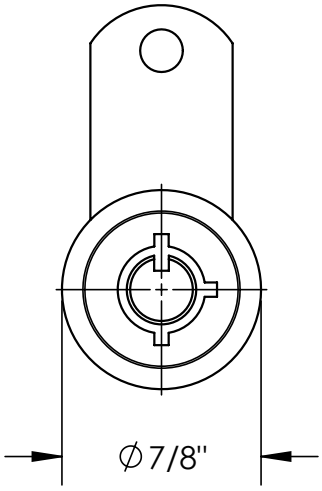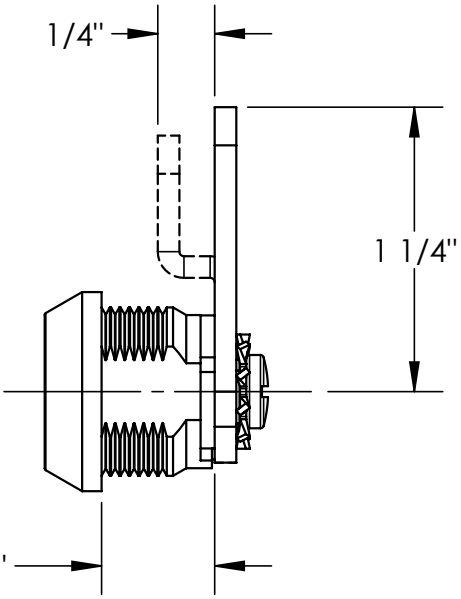
MFW-1038 TUBULAR CAM LOCK