STOCK LOCKS®

A PRODUCT OF CompX® FORT
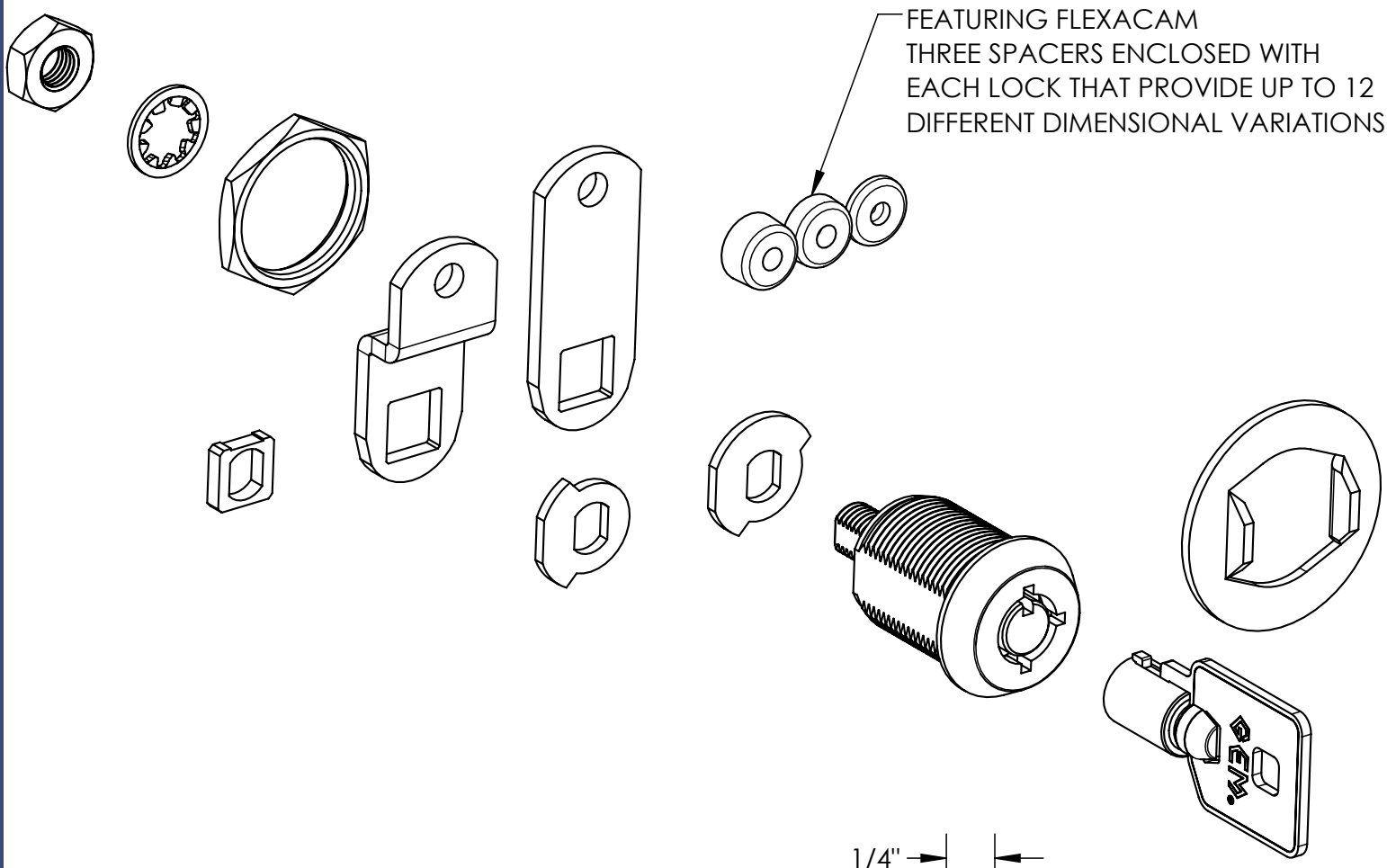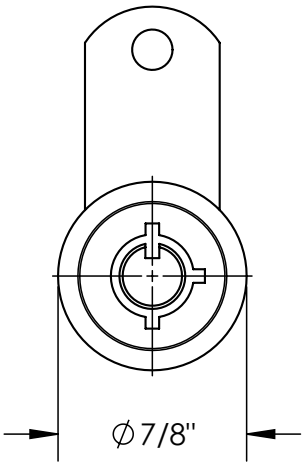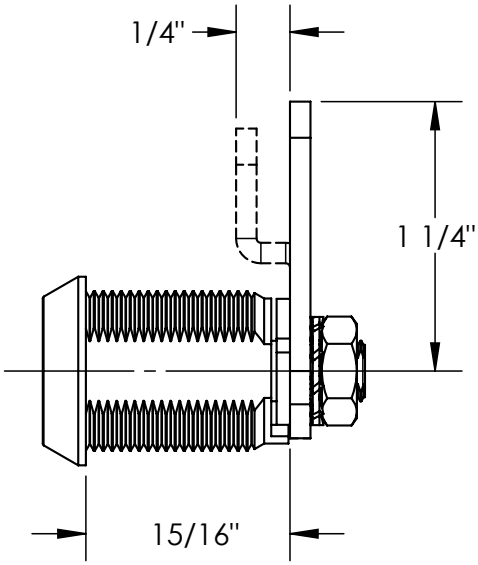
MFW-1078 TUBULAR CAM LOCK