STOCK LOCKS®

A PRODUCT OF CompX® FORT
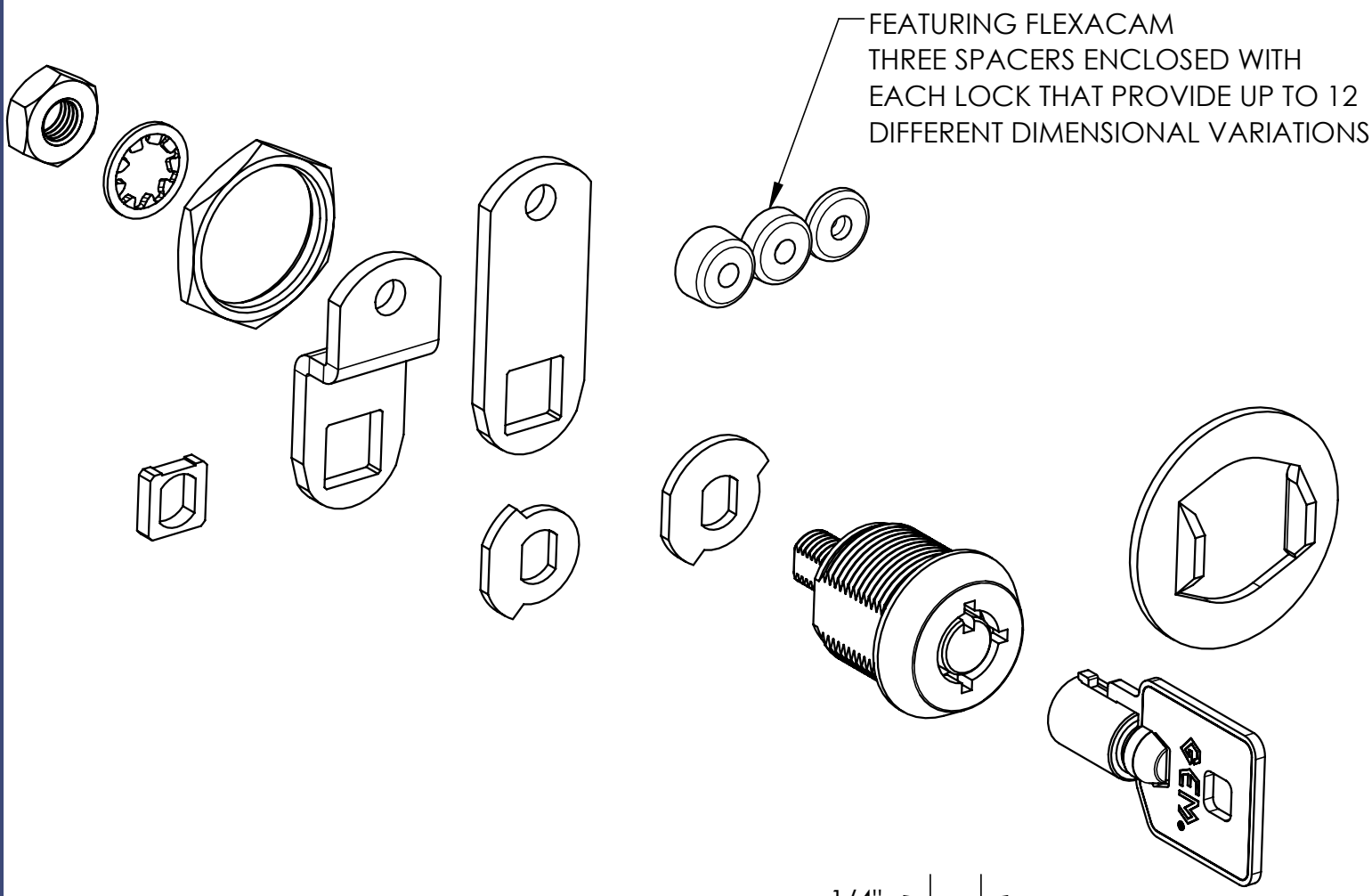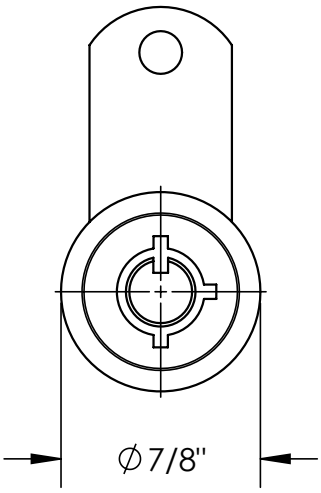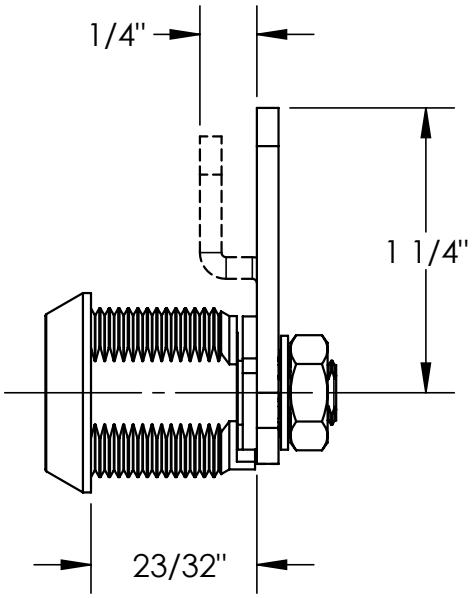
MFW-1058 TUBULAR CAM LOCK